Review of Scientific Instruments

RESEARCH ARTICLE | MAY 12 2016

High-speed, high-voltage pulse generation using avalanche transistor

Gou Yong-sheng; Liu Bai-yu; Bai Yong-lin; Qin Jun-jun; Bai Xiao-hong; Wang Bo; Zhu Bing-li; Sun Chuan-dong

Check for updates

Rev. Sci. Instrum. 87, 054708 (2016)
https://doi.org/10.1063/1.4948727

View Online
Export Citation

Articles You May Be Interested In

Solutions to single event current induced avalanche burnout

AIP Conf. Proc. (January 1991)

Development of a stereo-symmetrical nanosecond pulsed power generator composed of modularized avalanche transistor Marx circuits

Rev. Sci. Instrum. (September 2015)

High power and high repetition frequency sub-nanosecond pulse generator with two-phase immersion cooling technique

Rev. Sci. Instrum. (March 2021)

24 March 2026 17:22:10

AIP Publishing

REVIEW OF SCIENTIFIC INSTRUMENTS **87**, 054708 (2016)

High-speed, high-voltage pulse generation using avalanche transistor

Gou Yong-sheng,[1,2,a)] Liu Bai-yu,[1] Bai Yong-lin,[1] Qin Jun-jun,[1] Bai Xiao-hong,[1] Wang Bo,[1] Zhu Bing-li,[1] and Sun Chuan-dong[1]
[1]*Ultra-fast Diagnostic Labs, Xi'an Institute of Optics and Precision Mechanics, Xi'an 710119, China*
[2]*University of Chinese Academy of Sciences, Beijing 100049, China*

(Received 19 February 2016; accepted 22 April 2016; published online 12 May 2016)

In this work, the conduction mechanism of avalanche transistors was demonstrated and the operation condition for generating high-speed pulse using avalanche transistors was illustrated. Based on the above analysis, a high-speed and high-voltage pulse (HHP) generating circuit using avalanche transistors was designed, and its working principle and process were studied. To improve the speed of the output pulse, an approach of reducing the rise time of the leading edge is proposed. Methods for selecting avalanche transistor and reducing the parasitic inductance and capacitance of printed circuit board (PCB) were demonstrated. With these instructions, a PCB with a tapered transmission line was carefully designed and manufactured. Output pulse with amplitude of 2 kV and rise time of about 200 ps was realized with this PCB mounted with avalanche transistors FMMT417, indicating the effectiveness of the HHP generating circuit design. *Published by AIP Publishing.* [http://dx.doi.org/10.1063/1.4948727]

I. INTRODUCTION

High-speed and high-voltage pulse (HHP) has a wide application in fields of high-speed electro-optic switch,[1,2] high-speed photography, and high-speed LD drive.[3] Before avalanche transistor was invented, sparks discharged and hot ion tubes were typically used for HHP generation. Since the invention of avalanche transistor, it has been rapidly and widely used in HHP generation owing to its compact package, convenient use, and high stability. There are many papers about schematic circuits designed to generate HHP with avalanche transistor, but rare papers about how to select proper avalanche transistor and improve the speed of the HHP under a given schematic circuit were published. In this paper, a HHP generating circuit based on avalanche transistor was designed. In addition to this, methods on selecting proper avalanche transistor and improving the speed of the HHP with this given circuit have been developed specifically. In the second part of this paper, working principle of the avalanche transistor was demonstrated. In the third part, HHP generating circuit was designed, and the working principle and process of this circuit were illustrated. The method for selecting proper avalanche transistor and improving the speed of the HHP was described in the fourth part. In the fifth part, experimental results were discussed.

II. WORKING PRINCIPLE

When a high voltage is applied between the collector and emitter of the avalanche transistor, space charge region of the base and collector junction will feel a strong electric field. If the electric field is large enough, the electrons in the field will be accelerated and collide with the atom in the lattice. When electrons collide with atoms, new electrons and holes will be generated and accelerated. With this process cycled, collector current will increase instantly, which is called the avalanche multiplication effect in the transistor.

The multiplication effect in avalanche transistor can be controlled by injection of base carriers, and the amount of the base carriers injected in can be controlled by base current.[4] From Figure 1, we know that normal transistor operation lies in the region of collector-emitter voltages between 0 and BVceo and with forward base currents, where BVceo is the breakdown voltage between the collector and the emitter with the base open circuited. If a reverse current is applied to the base, the breakdown voltage between collector and emitter would increase above BVceo, but limited by BVcbo, where BVcbo is defined as the breakdown voltage between the collector and the base with the emitter open circuited. The avalanche region of the transistor lies between BVceo and BVcbo. An important item which needs to be noticed in Figure 1 is the negative slope of the constant Ib curves in the avalanche region. The negative slope means that the small-signal resistance, $ra = dV/di$, is negative. It is well known that a negative resistance implies unstable operation. Thus, avalanche transistors have excellent performance when they are used for high-speed pulse generation.

It is worth pointing out that the precondition of avalanche transistor works in avalanche region is a large enough collector current. This means that there must be enough carriers between collector and base junction to induce avalanche effect. Otherwise the avalanche transistor will be able to achieve quickly switching.[5,6]

III. HHP GENERATING SCHEMATIC CIRCUIT DESIGN

Because the avalanche breakdown voltage of a single transistor maybe just several hundreds volt, to generating higher voltage pulse, a Marx circuit with stacked avalanche

[a)]Electronic mail: yshgou@163.com

24 March 2026 17:22:10

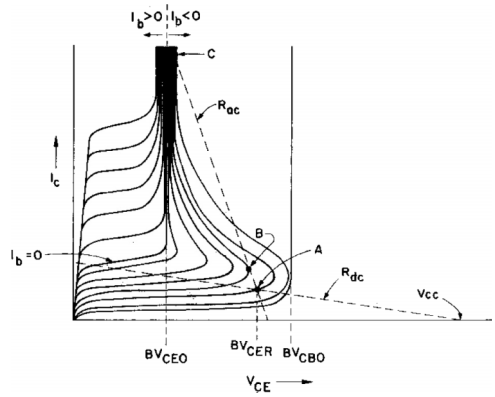

FIG. 1. Avalanche transistor I–V curve.

transistors was designed.[7–9] Marx type designs have the advantage of lower supply voltages, but at the cost of a much more stored charge.[10]

As shown in Figure 2, this HHP generating circuit mainly consists of N stages of typical avalanche transistor switching circuits. In this circuit, Q1 and C1 form the first stage, Q2 and C2 form the second stage, and in a similar way, Qn and Cn form the N-th stage. When the circuit works in quiescent station, transistors will be placed at cutoff region and the capacitors will be charged through resistor and diodes. As soon as the first stage is triggered via the small ferrite bead pulse transformer T1, the collector of the first stage (Ql) will be placed near ground potential, resulting in about two times BVcbo across the second stage (Q2). The second stage transistor then suffers a non-destructive avalanche breakdown due to this over voltage. As each stage turns on, the next "sees" an even greater over-voltage resulting in a "crack-the-whip" effect which results in faster rise times and shorter stage to stage delay.[11] There is no voltage applied to the output until the final stage (Qn) switches; this means that the rise time of the output pulse is basically determined by how fast the last stage transistor turned on. Zener diodes are employed in this circuit, and there are three advantages of using them: first, transistor damage caused by excessive voltage can be prevented; second, working consistency of the circuit can be enhanced; finally, the circuit triggered by noise can be effectively prevented.

In Figure 2, when each transistor switches, waves in both directions will be launched. In the forward direction,

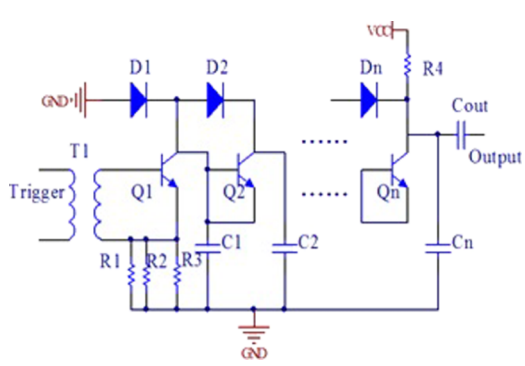

FIG. 2. HHP generating circuit.

they add synchronously to deliver a large fast edge. In the reverse direction, they are not synchronous and thus produce a staircase ramp. If these waves are not absorbed, a large reflection will be sent back up the string. These reflections could be two to three times of the maximum current that transistors could tolerate and could cause local high currents and voltages resulting in device failures. To resolve this problem, the emitter of the trigger stage is connected to ground through some paralleled resistors. These resistors are expected to terminate the circuit in its characteristic impedance and absorb the reflection waves, and with this measure, circuit reliability and pulse fidelity could be greatly improved.

IV. HHP GENERATING PRINTED CIRCUIT BOARD (PCB) CIRCUIT DESIGN

The switching speed of avalanche transistor can reach hundreds of picoseconds, but in fact the rise time of the HHP generating by these transistors may be up to nanosecond if the PCB circuit is not specifically designed. Thus it is critical to select the proper avalanche transistor and design the specific PCB to improve the rise time of the pulse leading edge.

To get the HHP of given amplitude with the minimum transistors, the avalanche breakdown voltage of selected avalanche transistor should be as large as possible. Avalanche current of the transistor depends on the pulse amplitude and the output impedance. At given pulse amplitude and output impedance, avalanche current can be calculated by Ohm's law. In practice, the avalanche current could be smaller than calculated if the transistors are parallelly used. Package of the transistor should be as small as possible for reducing lead inductance and decreasing layout of the PCB. In practical circuit, FMMT417 was selected as the avalanche transistor, which is specifically designed for avalanche mode operation. Its avalanche breakdown voltage is up to 330 V and peak avalanche current is about 60 A. Its small surface mount package leads to a lower lead inductance than the TO-92 package and allows for a much more compact PCB which could further reduce unwanted circuit inductance.

Because HHP generating circuit always outputs the pulse with large current, it is the inductance that limits the rise time of the output pulse in the PCB circuit. So more attention should be put on the PCB circuit design to reduce the parasitic inductance. In a HHP generating circuit, the parasitic inductance is mainly contributed by the avalanche transistors. Note that for every transistor corresponding to a capacitor in the schematic circuit, the PCB circuit can be designed as a transmission line which is composed by the parasitic inductance and capacitors.

In our PCB circuit design, capacitors were realized by the sold on PCB board. Then the inductances of the transistors and the PCB capacitors form a transmission line. It tapers from the load impedance at the high voltage output end to a low impedance at the triggered end. If the pulse is to drive a 50 Ω load, then the capacitance of the final stage will be adjusted to react with the internal inductance of FMMT417 (2 nH) to

24 March 2026 17:22:10

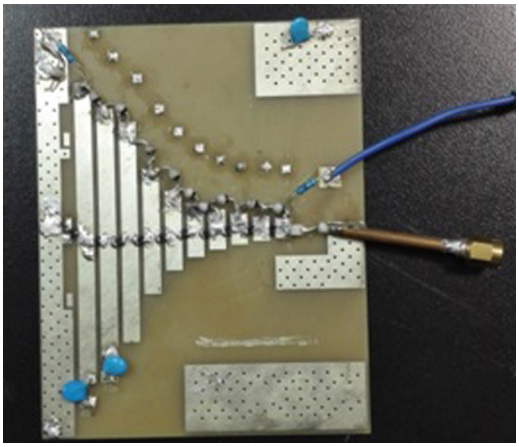

FIG. 3. Practical PCB board.

give a nominal 50 Ω output impedance. The impedance at the low or triggered end of the line is kept low to provide enough capacitance to keep the "bottom" of the stack on until the full string has erected. It is important to have a smooth change in impedance along the line, because abrupt changes will cause reflections which can cause device failure, and degrade the output waveform. Determination of a schedule of capacitance for the string is fairly simple. First, the overall current through the string is needed to be determined. For example, a 40 A into a 50 Ω resistive load implies a 2 kV output pulse. Assuming that 2/3 of the dc voltage for each stage (300 V) will be applied to the load, indicating that 10 stages are required here. Breakdown voltage applied to the first stage is about 300 V. Hence, if 40 A current is needed, the corresponding impedance at the trigger end should be about 7 Ω. Therefore, a transmission line linearly tapering from 7 Ω to 50 Ω can be designed. The inductance of the first stage is about 2 nH so that capacitance at the first stage can be calculated according to formula (1), and capacitor for first stage is about 40 pf,

$$Z = \sqrt{L/C}. \tag{1}$$

Note that due to the amount of board space required for this large capacitor, a conventional surface mount ceramic unit would be used for this stage. A smooth line can be projected from 7 Ω to 50 Ω and the capacitance for each of the remaining 9 stages can be calculated using the formula above.

V. EXPERIMENT AND RESULT

According to the HHP schematic circuit and PCB circuit designed above, a corresponding PCB board was manufactured showing in Figure 3. The zener diodes are part of the DC bias circuit, so we choose conventional leaded component BZT03C300 as the zener diode. Its zener voltage is about 300 V which is a little smaller than avalanche breakdown voltage 330 V of FMMT417. After the first and second stages, the capacitance to ground for each stage is provided by parallel plate capacitors formed by varying the area of the pads on a double sided printed circuit board. These capacitors are very low in series inductance and have very good high voltage characteristics. The high voltage hold off is determined by the bulk dielectric strength of the PC board itself.

After mounting all devices, the circuit has been tested with a Lecroy oscilloscope with the bandwidth of 40 GHz. The output pulse is shown in Figure 4 and the amplitude has been attenuated 1000 times. Rise time of the pulse leading edge achieves about 200 ps and pulse amplitude achieves 2 kV. These results are consistent with the theoretical design. With the leading edge of this pulse, a narrow pulse (about 200 ps width) is feasible which can be used for gating X-ray framing camera after forming by transmission line.

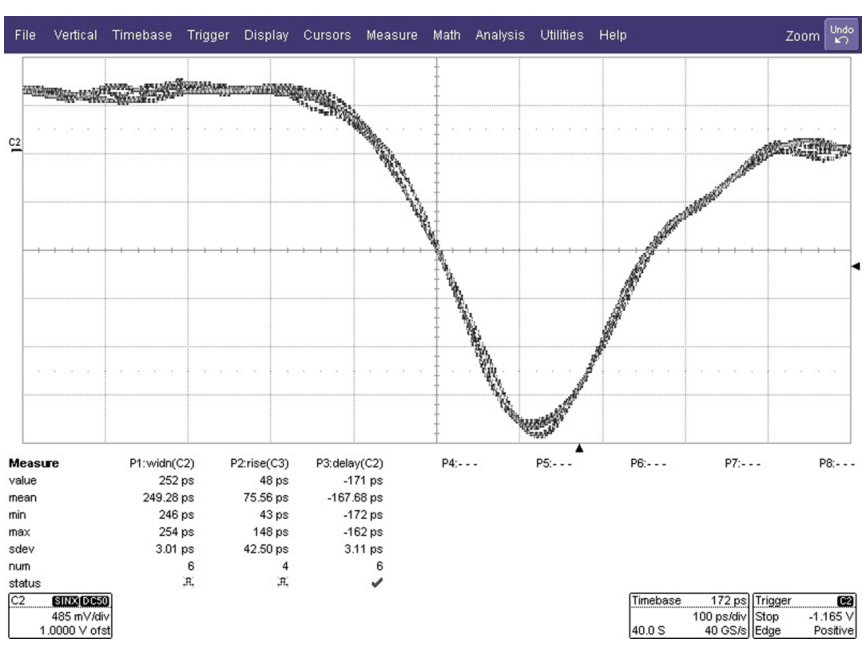

FIG. 4. Output pulse of the HHP generating circuit.

24 March 2026 17:22:10

VI. CONCLUSIONS

In this work, the working mechanism of avalanche transistors has been analyzed; and HHP generating circuit has been designed. High-voltage pulse with leading edge about 200 ps and amplitude about 2 kV has been output by the designed circuit. It was demonstrated that when trying to produce HHP in the hundred picoseconds range, the control of all unwanted inductance and capacitance is vitally important. With reduced unwanted inductance and capacitance of the HHP generating circuit, high-voltage pulse with leading edge about hundreds of picoseconds can be generated an obtained.

[1]A. I. Bishop and P. F. Barker, Rev. Sci. Instrum. **77**, 044701 (2006).
[2]A. K. Dharmadhikari, J. A. Dharmadhikari, K. P. Adhi, N. Y. Mehendale, and R. C. Aiyer, Rev. Sci. Instrum. **67**, 4399 (1996).
[3]K. H. Georgi, R. Flemming, and V. Krozer, J. Phys. E: Sci. Instrum. **17**(3), 204 (1984).
[4]J. P. Hansen, A Nanosecond, High-Current Pulse Generator Using Paralleled Avalanche Transistors, NRL Report 6539, 8 September 1967.
[5]W. M. Henebry, Rev. Sci. Instrum. **32**, 1198 (1961).
[6]Y. L. Guo, N. N. Yan, S. H. Guo, and G. Zeng, in *Proceedings of the 2013 International Workshop on Microwave and Millimeter Wave Circuits and System Technology*, *Thu. Mount Emei*, *24–25 October 2013* (IEEE, 2013), pp. 296–299.
[7]J. Upadhyay and C. P. Navathe, Meas. Sci. Technol. **17**(7), N25 (2006).
[8]V. N. Rai, M. Shukla, and R. K. Khardekar, Meas. Sci. Technol. **5**, 447–449 (1994).
[9]J. A. Chakera, P. A. Naik, and S. R. Kumbhare, J. Indian Inst. Sci. **76**, 273–278 (1996), http://journal.library.iisc.ernet.in/index.php/iisc/article/view/643.
[10]Y. Xuelin, D. Zhenjie, and Y. Jianguo, High Power Laser Part. Beams **22**(4), 757–760 (2010).
[11]L. Jinyuan, S. Bing, and C. Zenghu, Rev. Sci. Instrum. **69**, 3066 (1998).

24 March 2026 17:22:10